Vol.2(1); pp.29-38, Aug. 2021.
Article Number: AJ2342102012938
ISSN: 0794–1668

Website: www.josedet.org

Journal of Science, Engineering Development, Environment & Technology (JOSEDET)

DESIGN AND FABRICATION OF A PORTABLE ELECTRICALLY POWERED ALUMINIUM CAN CRUSHING MACHINE

Nnanna, I.[1], Otuu, J. B [2] and Nnachi Benjamin O.[3]

[1-3]Department of Mechanical Engineering, Akanu Ibima Federal Polytechnic, Unwana, Ebonyi State, Nigeria.
Corresponding author: **Nnanna Innocent,** Email: innocentnnanna20@gmail.com

---

Received: 22nd July, 2021; Accepted: 27th August, 2021

Abstract: *This work aimed to design and fabricate a portable electric Can Crusher machine to reduce the scrap volume and use the Cans so that carrying them to the recycle site becomes easy. Now-a- days, a large number of cans are used in hotels, canteens etc. and a large volume of space is required for storing or dumping the used Cans. This project includes fabrication of a Can Crusher using single slider crank mechanism which will reduce the volume of cans at least 70%. This report demonstrates the necessary calculation, assembling and fabrication of the machine. Under this project work, two Can Crushers have been constructed. The earlier one, made during the period of 7th semester was manually operated. The model is then upgraded to an electrically operated one. Finally, a comparison between the two Can Crushers, i.e. manually operated and electrically operated, is made, regarding their efficiencies, cost of construction etc, and presented here in this report.*

Keywords: Power transmission, kinematic chain, Chain drive, Crank Wiper Motor

1.0 Introduction

Can Crushers are used in mechanical and allied industries which crush cans made of different materials. The Can Crusher machine is widely used in beverage industries or in scrap dealers' shop to reduce the volume of the cans. Consequently, it leads to the reduction of the transportation cost. This machine is primarily used to save space and for recycling. It can be placed anywhere. In today's life most of the food items are packed in cans like Cold and hot drinks and other beverages. Commercial establishments like cafeteria and bars, have to deal with leftover cans. Storage of these cans is often a problem and these increases total volume of the trash. Therefore, using can crusher in such places proves to be advantageous.

1.1 Objective:

The main objectives of the project are-

i) To fabricate a simple and easy to use Can Crusher machine involving low cost of construction and easily movable from one place to another.

ii) To reduce the volume of the cans at least 70%.

1.2 Can Crusher Working:

A combination of a number of rigid bodies assembled together in such a way that the motion of one causes constrained and predictable motion to the others is known as a mechanism. As many mechanisms can be obtained as the number of links in a kinematic chain by fixing, in turn, different links in a kinematic chain. This method of obtaining different links in a kinematic chain is called inversion of mechanism. A mechanism is the mechanical

portion of the machine that has the function of transferring motion and forces from a power source to output. The mechanisms in this project are as follows:

- Inversion of single slider crank mechanism
- Chain drive mechanism for power transmission.

1.2.1 Inversion of Single Slider Crank Mechanism:

The kinematic chain is a combination of four or more kinematic pairs, such that the relative motion between the links or elements is completely constrained. The simplest and the basic kinematic chain is a four bar chain. For a four bar chain, the sum of the shortest and longest link lengths should not be greater than the sum of the remaining two link lengths if there is to be continuous relative motion between the two links.

A single slider crank chain is a modification of the basic four bar chain. It consists of one sliding pair and three turning pairs. This type of mechanism converts rotary motion into reciprocating motion and vice versa. Links of a slider crank chain are:

1. Frame and cylinder
2. Crank
3. Connecting rod
4. Crosshead or piston

Four different mechanisms can be obtained by fixing each of the link of the single slider crank chain. In the first inversion, link 1 ie. frame and cylinder is fixed. In the second inversion, link 2 ie. crank is fixed. In the third and fourth inversions, link 3 ie. connecting rod and link 4 ie. crosshead is fixed respectively. In this project, we use the first inversion.

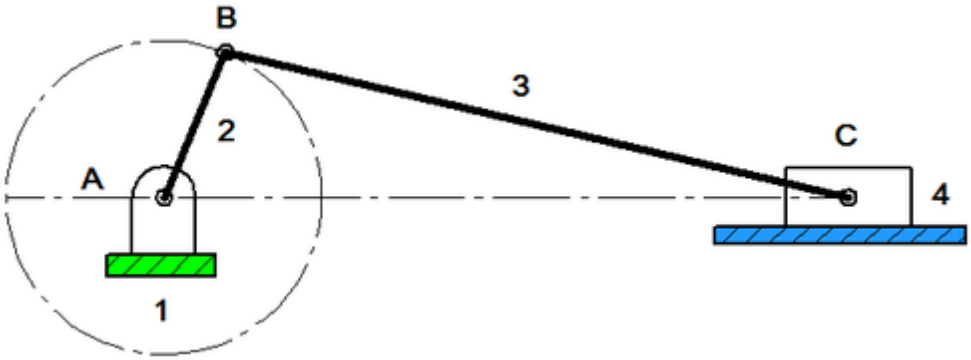

Figure1.1: Single slider crank

1.2.2 Chain drive mechanism:

Chain drive is a way of transmitting mechanical power from one place to another. It is often used to convey power to the wheels of a vehicle particularly bicycles and bikes. It is also used in a wide variety of machines besides vehicles.

Most often, the power is conveyed by a roller chain, known as the drive chain or transmission chain passing over a sprocket gear with the teeth of the gear meshing with the holes in the links of the chain. The gear is turned and this pulls the chain putting mechanical force into the system.

Sometimes the power is output by simply rotating the chain, which can be used to lift or drag objects. In other situation, a second gear is placed and the power is recovered by attaching shafts or hubs to this gear. Though drive chains are often simple oval loops, they can also go around corners by placing more than two gears along the chain,

 innocentnnanna20@gmail.com

gears that do not put power into the system or transmit it out are generally known as idler wheels. By varying the diameter of the input and output gears with respect to each other, the gear ratio can be altered eg. when the bicycle paddle's gear rotates once, it causes the gear that drive the wheels to rotate more than one revolution.
Roller chain and sprocket is a very efficient method of power transmission compared to (friction-drive) belts with far less frictional loss. Although chains can be made stronger than belts, their greater mass increases drive train inertia.
Drive chains are most often made of metals, while belts are often rubber, plastic, urethane or other substances. Drive belts can slip unless they have teeth, which means that the output side may not rotate at a precise speed and some work gets lost to the friction of the belts as it bends around the pulleys. Wear on rubber or plastic belts and their teeth is often easier to observe and chains wear out faster than belts if not properly lubricated.

1.3 Proposed Model:

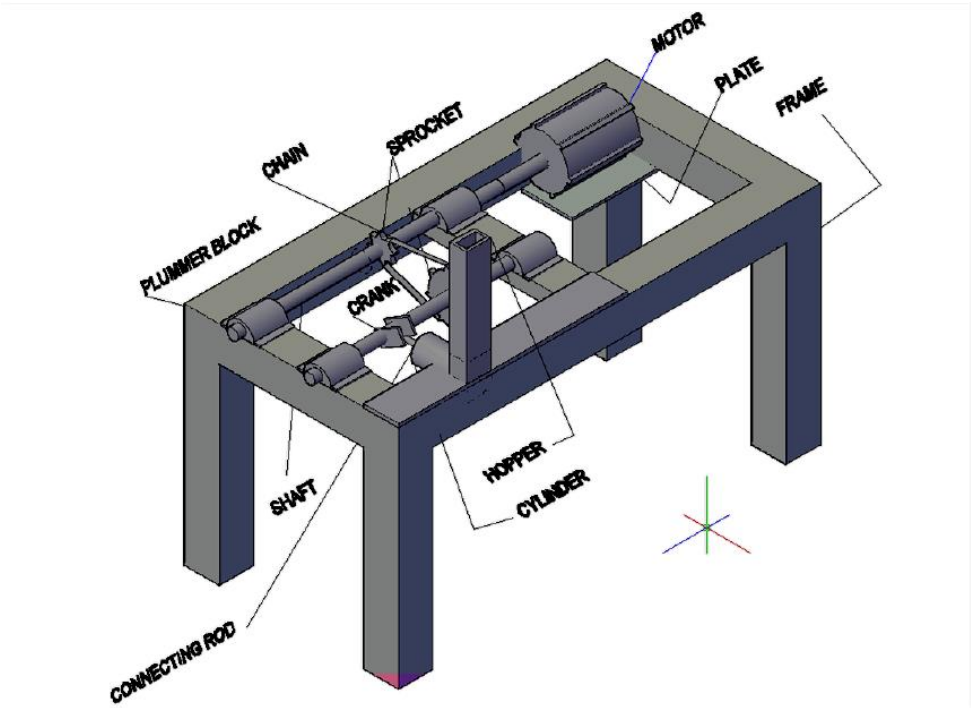

Fig 1.2: Schematic diagram of the constructed (a) Manually operated and (b) Electrically operated Can Crusher

1.4 Main Parts
Selection of Materials for Different Components
The various material selections for the components are done on the basis of three main points of view:
 Light Weight

 Strength

 Availability of materials in the market
Selected materials for the components are tabulated below

 innocentnnanna20@gmail.com

Table 1.1: Materials for Components

Iron pipes	Main Frame
Chain	Power Transmission
Sprocket	Power Transmission
Plummer block	Support for rotating shaft
Handle	For rotation in manually operated Can Crusher
Battery	Power source
Electric Wiper Motor	Rotation of the shaft in electrically operated Can Crusher

1.4.2. Chain

Chain drive is widely used for the transmission of power where shafts are separated at distances greater than that for which gears are practical. In such cases, sprockets take the place of gears and drive one another by means of a chain passing over the sprocket teeth.

Roller chain or bush roller chain is the type of chain drive most commonly used for transmission of mechanical power on many kinds of domestic, industrial and agricultural machinery, including conveyors, wire- and tube-drawing machines, printing presses, cars, motorcycles, and bicycles. It consists of a series of short cylindrical rollers held together by side links. It is driven by a toothed wheel called a sprocket. It is a simple, reliable, and efficient means of power transmission through Hans Renold is credited with inventing the roller chain in 1880, sketches by Leonardo da Vinci in the 16th century show a chain with a roller bearing.

Chain material is such that it has the following properties:

- Corrosion resistance
- Resistance against wear and tear
- Capable to withstand humid manufacturing environments
- Highly durable
- High tensile strength
- Abrasion resistance

1.4.3. Sprocket

A Sprocket is a profile wheel with teeth or cogs that mesh with a chain, track or other perforated or indented material. The name ‘sprocket’ applies generally to any wheel upon which a radial projection engages a chain passing over. It is distinguished from a gear in that sprockets are never meshed together directly and differs from a pulley in that sprockets have teeth and pulleys are smooth.

Sprocket are used in bicycles, bikes, cars, tracked vehicles and other machinery either to transmit rotary motion between two shafts where gears are unsuitable or to impart linear motion to a track Sprockets are of various design. Sprockets typically do not have a flange. Sprockets and chains are also used for power transmission from one shaft to another where slippage is not admissible, sprocket chains being used instead of belts or ropes and sprocket wheels instead of pulleys. They can be run at high speed and some forms of chains are so constructed as to be noiseless even at high speed, tape etc.

Sprockets are of various design. Sprockets typically do not have a flange. Sprockets and chains are also used for power transmission from one shaft to another where slippage is not admissible, sprocket chains being used instead of belts or ropes and sprocket wheels instead of pulleys. They can be run at high speed and some forms of chains are so constructed as to be noiseless even at high speed.

innocentnnanna20@gmail.com

1.4.4. Plummer block

A Plummer block also known as a Pillow block or Housed bearing unit is a pedestal used to provide support for a rotating shaft with the help of compatible bearings and various accessories. Housing materials for a Plummer block is typically made of cast iron or cast steel. A Plummer block may contain a bearing with one of several types of rolling elements including ball, cylindrical roller, spherical roller, tapered roller or metallic or synthetic bushing. The fundamental application of Plummer block is to mount a bearing safely, enabling its outer ring to be stationary while allowing rotation of the inner ring. The housing is bolted to a foundation through the holes in the base. It is of split type or solid type.

1.4.5 Electric Wiper Motor

Wiper motors rotate in a continuous motion (not back-and-forth) and run on DC voltage. Since they run on DC, the motors can be sped up and slowed down based on the voltage level applied to them, and the direction can be reversed by reversing the power leads. To get motions that are not circular (like an up and down motion), mechanical attachments need to be added to the motor's shaft.

2.0 LITERATURE SURVEY

From the research papers of many researchers we have found the following findings:

Elfasakhan. A, et.al. (2012) presented a new design. This Can Crusher which can crush a single can at a time consists of a hardware and software. The hardware includes mechanical structure, servomotor, light sensor, microcontroller and pneumatic system. The pneumatic system has been used instead of an electrical motor since electrical motor with the needed specification (torque and horsepower) is very expensive. The software is the maestro for operating and controlling different system components.

More. S, R, et.al. (2013) have presented a review on study of jaw plates jaw crusher which tells us that crushers are major size reduction equipment used in mechanical, metallurgical and allied industries which crushes different types of soft and hard materials. This paper provides the background of swing jaw plates of jaw Crusher and kinematics and dynamic analysis are done to improve the design.

Saif.Set.al.(2014)have proposed a paper on fully automatic Can Crusher using pneumatics and microcontroller sensor.

KhanapureL.R., et.al.(2014) have presented a paper which provide crushing action in both the strokes thus making it a dual stroke Can Crusher and provide automatic falling of crushed cans and automatic feed of new cans to be crushed so as to keep the crushing area free from human intervention thus providing safety to the operator.

Kumar.N,et.al. (2016) have presented a paper about fabrication of mechanical crusher which would help to crush the used juice cans, paint cans and punched sheet metal waste. The crusher is designed to operate on a crank and slotted lever mechanism and the power for the electrical operation of the crusher is taken from an electrical motor. This Crusher crush the cans effectively and the manufacturing as well as the maintenance cost is very less which is suitable for small recycling plants.

Patel,B.Aet.al.(2016) have presented a paper on design and fabrication of automatic can crusher and vending machine using cam and follower mechanism. Total process of crushing is automatic, no manual supervision is necessary for the whole process. Vending mechanism is introduced in project marketing and to create public.

Wakchaure.Cet.al.(2016)have presented a paper on design and fabrication of automatic Can Crusher using double acting cylinder for pneumatic system and ic's.

Shinde. S, et.al.(2017) carried out the study of the current Can Crushers and the various mechanisms employed. Some of the technological aspects like robust design, volume reduction were successfully implemented. Overall, the project was very enriching in terms of technical fabrication and design process. The current prototype reduces the volume of cans by 65 %. Auto feed mechanism have trouble due to speed which needs some improvement in near future.

From the above research papers,we have found that a number of methods are used for fabricating the Can Crusher including pneumatic system with IC's, motors etc. Pneumatic Can Crushers use automation reducing human

 innocentnnanna20@gmail.com

intervention. However the use of air compressor, valves and pipelines make the equipment more expensive which is not suitable for small scale recycling plant. Further in the manually operated models of the research papers the crushed cans need to be removed manually and also new cans need to be placed every time. Therefore we have chosen this project to fabricate an auto-feed, cost effective Can Crusher where the removal of crushed cans is not manual.

3.0 FABRICATION PROCESS AND COST

3.1 Fabrication Process:

1. Construction of the Frame by welding.

2. Assembling of shaft, Plummer block, sprockets, crank and other components.

3. For manually operated Crusher, a lever is added for the rotation of the shaft.

4. In case of electrically operated Crusher, an electric motor is used for the rotation purpose.

Figure 1.3 Frame

Figure 1.4: Manually operated Can Crusher Model

innocentnnanna20@gmail.com

Figure 1.5: Electrically operated Can Crusher Model

3.2 Cost Analysis:

Table 1: Manually operated Can Crusher:

S/No.	Part	Qty.	Rate(N)	Amount(N)
1	Chain and sprocket	1	10500	10500
2	Plummer block	4	4000	16000
3	Frame with other accessories	1	8000	8000
Total	**34500**			

Table 2 : Electrically operated Can Crusher:

S/No.	Part	Qty.	Rate(N)	Amount(N)
1	Chain and sprocket	1	10500	10500
2	Plummer block	4	4000	16000
3	Frame with other accessories	1	8000	8000
4	Motor	1	35000	35000
5	Battery	1	30000	30000
Total	**99500**			

4.0 ANALYSIS

4.1 Collected Data

Table 3: Dimensions of the uncrushed cans used for data collection

	COKE Can	AVERAGE	MAAZA Can	AVERAGE
Dimension (mm)	57.92		52.86	
	57.70	**57.80**	52.73	**52.77**
	57.79		52.72	
	57.78		52.72	
	57.72		52.84	
Length (mm)	133.38	**133.95**	133.79	**133.80**

innocentnnanna20@gmail.com

To determine the force required to crush a can up to 70%, we take the help of a machine. In this machine, we take 4 plates of mass 5 kg to crush the can.
Therefore, total mass required =5×4=20 kg

4.2 Calculations
The diameter of can is 57.8mm.
So taking clearance, diameter of piston is assumed to be 60mm.

i) For manually operated Can Crusher:

- Force on piston:

  F = m x g
  = 20 x 9.81
  = 196.2 N

  So, we assume the force required as **220 N**.
- **Speed of the lever**:

  The larger sprocket has 44 teeth and the smaller one has 18 teeth.

We wish to crush 10 cans in 1 min.

$N_1/N_2 = T_2/T_1$

$N_1 = (T_2/T_1) \times N_2 = (44/18) \times 10 = 24.4 \sim$ **25 rpm**

- Torque transmitted through the lever:

  T = Force × length of lever
  =220 × 27×10-2
  =59.2 N-m

- Power transmitted:

  $P = 2\pi N_1 T/60$
  $= (2\pi \times 25 \times 59.2)/60$
  = 154.98 W
  =.15498 KW

ii) For Electrically operated Can Crusher:

We have already calculated the force required on the piston to crush the Can which is **220 N.**

T = Force × length of the crank

= 220 × 28×10-2
= 61.6 N-m

As the calculated torque is 61.6 N-m, so we choose a wiper motor having torque 80N-m which will be the most suitable for our machine.
For this motor, the speed range is 35±5 rpm.
Taking 35 rpm as the speed of the motor, we get $N_1/N_2 = T_2/T_1$

Or $N_2 = T_1/T_2 \times N_1$
Or $N_2 = 18/44 \times 35$
Or $N_2 = 15$ rpm

Therefore, theoretically we suppose to crush **15** Cans/minute.

 innocentnnanna20@gmail.com

Table 4: Comparison of different parameters for manually and electrically operated can crusher

PARAMETERS	MANUALLY OPERATED	ELECTRICALLY OPERATED
Torque Transmission	Less compared to Electrically operated	High
Volume reduction of cans	70%	75%
No. of cans crushed in one minute	10	15
Time consumption during the operation	More	Less
Cost of fabrication	Less	High
Efficiency	Less	High
Human effort	Required	Not Required

5.0 Conclusion

After the successful fabrication of the Can Crusher, the machine was tested from which we obtained the above-mentioned observations. The cans were crushed up to the desired volume in the manually operated Crusher. Further we have seen that the Cans were crushed to a much smaller volume in the electrically operated one. The crushers have been fabricated keeping in mind about the minimum power requirement and minimum effort to the operator. The manually operated Can Crusher will be suitable for small scale recycling plants while the electrically operated Can Crusher will be suitable for medium or large scale recycling plants.

5.1 Future Scope

1. The currently developed can crusher machine can crush only low strength cans made of aluminum. The machine can be modified to crush cans which are made of medium strength materials.

2. With automation, the system can become more robust.

REFERENCES

Elfasakhany. A, et.al (September, 2012). Design and Development of an Economic Autonomous Beverage Cans Crusher, *International Journal of Mechanical Engineering and Technology*, 3(3), 107-122.

Khanapure Laxmikant R.et.al, (April, 2014). The Dual Stroke Can Crusher, *International Journal of Recent Development in Engineering and Technology* 4(4), 17-21.

Kumar. N, et.al. (January, 2016). Design of Mechanical Crushing Machine, *International Research Journal of Engineering and Technology*, 3(1), 921-926.

More. S. R, et.al. (January, 2013). A Review on Study of Jaw Plates of Jaw Crusher, *International Journal of Modern Engineering Research*, 3(1), 518-522.

Patel. B. A, et.al. (October, 2016). Design And Fabrication of Automatic Can Crusher And Vending Machine, *International Journal of Emerging Technology and Advanced Engineering*, 6(10), 59-62.

Saif. S, et.al. (October, 2014). Fully Automatic Can Crusher, *International Journal of Mechanical and Industrial Technology*, 2(2), 155-159.

Shinde. A. S, et.al. (June, 2017). Design and Fabrication of Aluminium Tin Can Crusher, *International Conference*

innocentnnanna20@gmail.com

on Ideas, Impact and Innovation in Mechanical Engineering,5(6), 39-44.

Wakchaure. C, et.al. (April, 2016). Design and Fabrication of Autom

innocentnnanna20@gmail.com